BRILLIANCE®
LED
A HIGHER LIGHT FORM®

STRIP LIGHT GUIDE

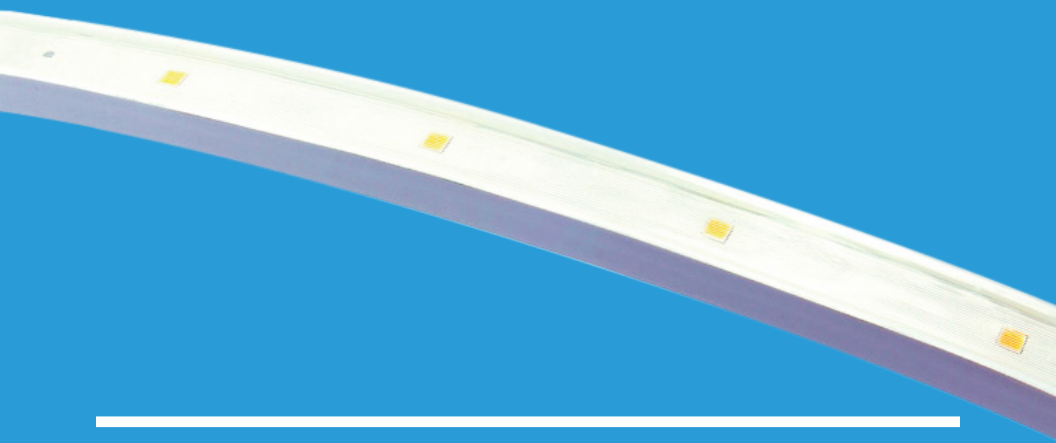

7202 E Cave Creek Rd, Suite 3A | PO Box 2281 | Carefree, AZ 85377
(800) 867-2108 | brillianceled.com

CUT SHEET

DESCRIPTION:

The Brilliance LED AC (TPU-Gen III) Strip Light is rated for outdoor use and can be directly connected to an existing 8-16 VAC landscape lighting system. Great accent lighting for stairs, railings and overhangs. The LEDs on this Strip Light are encased in non-yellowing material that installs easily.

FEATURES:

- Dimmable with most magnetic transformers
- Max length for power feed is12m (39′ 4″)
- Available in 25 meter reels or custom cut to specific lengths

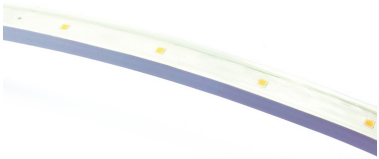

PART NUMBER : BRI SL3 XXXX XX 65

- 2700 / 5000 / red / green / blue — KELVIN TEMPERATURE
- LENGTH (measurement in meters)

Wattage	1.8 per meter
Lumens	144 (45/ft)
Kelvin Temperature	2700, 5000
Color	red, green, blue
Operating Range	8-16 VAC
CRI	75
IP	65
Lamp Life (hours)	35,000
Warranty (years)	3

Brilliance LED 3rd Generation Strip Light Dimensions:
30 cm Example without end connections
(may be cut at each 3 LED section - 10 cm)

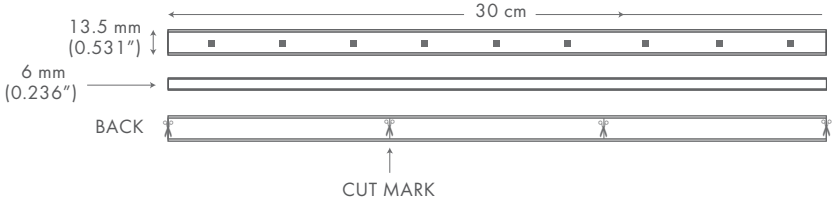

ACCESSORIES

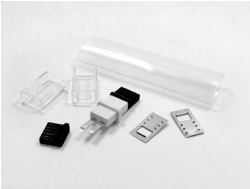

Double-Sided Connector Kit
Part # - 0 35127 47542 4
1 - Double-Sided Connector
2 - Clear Plastic Retainers
2 - Metal Anti-Slip Plates
1 - Heat Shrink Tube

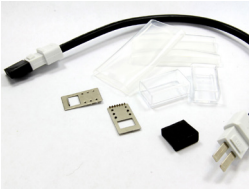

Jumper Connector Kit
Part # - 0 35127 47606 3
1 - Jumper Connector
2 - Clear Plastic Retainers
2 - Metal Anti-slip Plates
2 - Heat-shrink Tubes

90° Jumper Connector Kit
Part # - 0 35127 47698 8
1 - Jumper Connector
2 - Clear Plastic Retainers
2 - Metal Anti-slip Plates
2 - Heat-shrink Tubes

Power Feed Kit
Part # - 0 35127 47544 8
1 - Power Feed
1 - Clear Plastic Retainer
1 - Metal Anti-slip Plate
1 - Heat-shrink Tube

"T" Power Feed Connector Kit
Part # - 0 35127 47608 7
1 - "T" Power Feed Connector
2 - Clear Plastic Retainers
2 - Metal Anti-slip Plates
2 - Heat-shrink Tubes

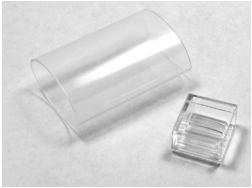

End Cap Kit
Part # - 0 35127 47607 0
1 - End Cap
1 - Light Shield
1 - Heat-shrink Tube

Extrusion Kit
Part # - 0 35127 47611 7
1m (3.2′) Extrusion sections

Clip & Screw Kit
Part # - 0 35127 47543 1
50 - Plastic Clips
100 - Screws

INSTRUCTIONS

STEP 1: Place heat shrink tube & clear retainer on strip light.

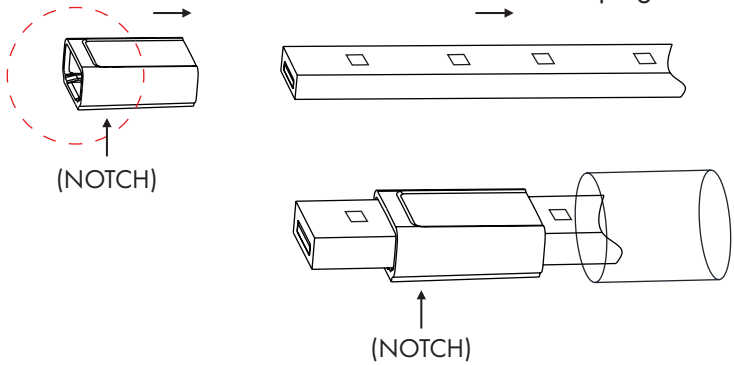

STEP 2: Connect power feed to strip light.

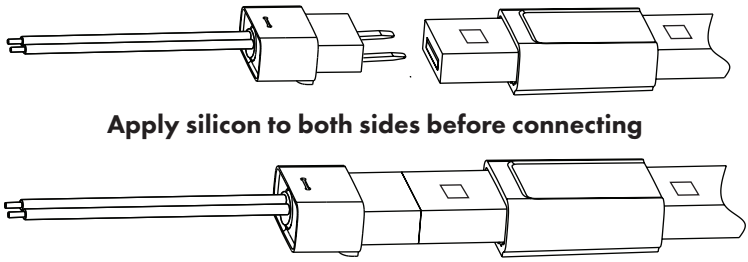

Apply silicon to both sides before connecting

DO NOT insert connector pins on LEDs Side!
(see figure D)

STEP 3: Place metal anti-slip plate & slide clear retainer over.

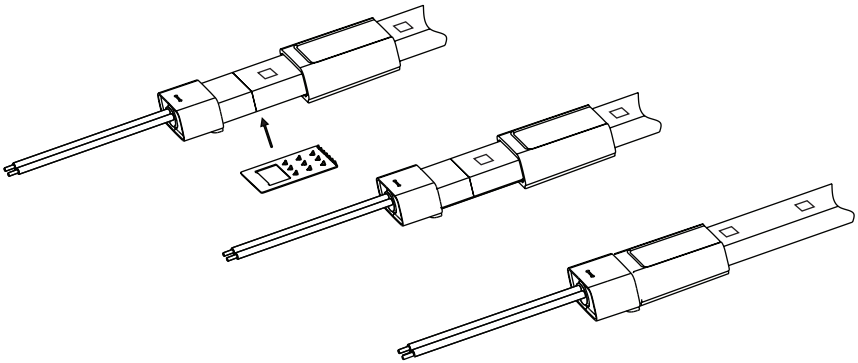

STEP 4: Cover with heat shrink tube & seal with heat gun.

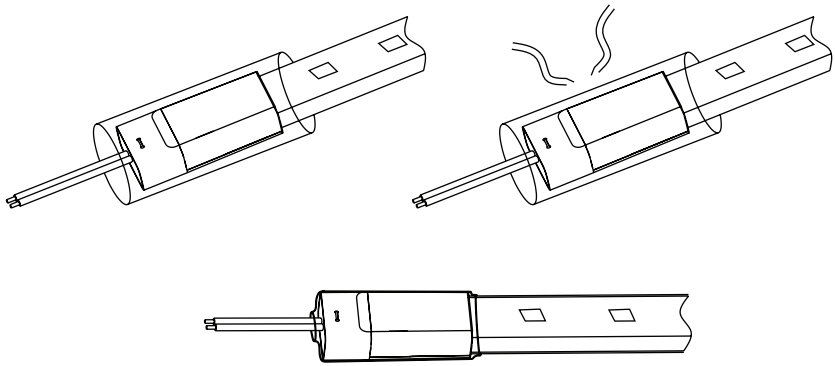

STEP 5: Cover with heat shrink tube & seal with heat gun.

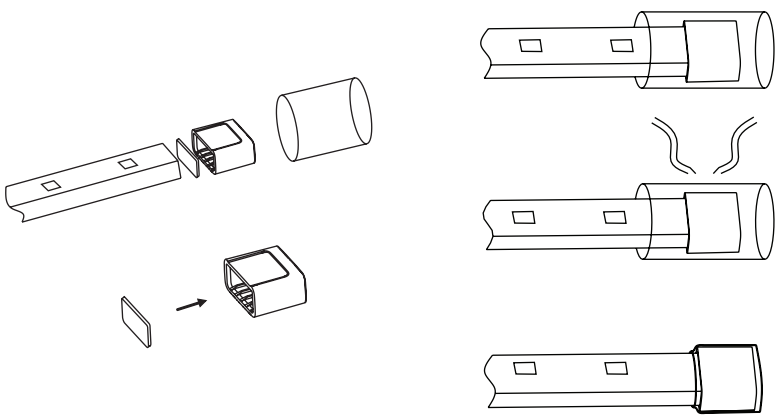

FIGURES

FIGURE A: Accessories

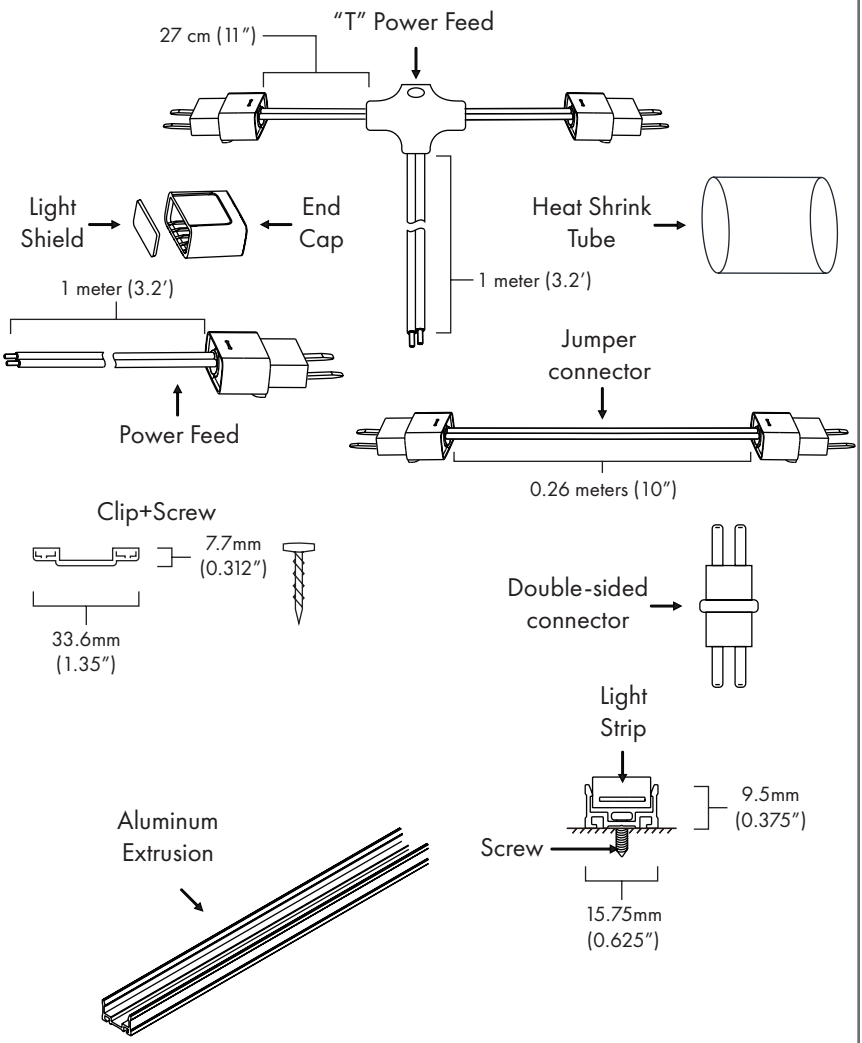

FIGURE B: Parts & Pieces

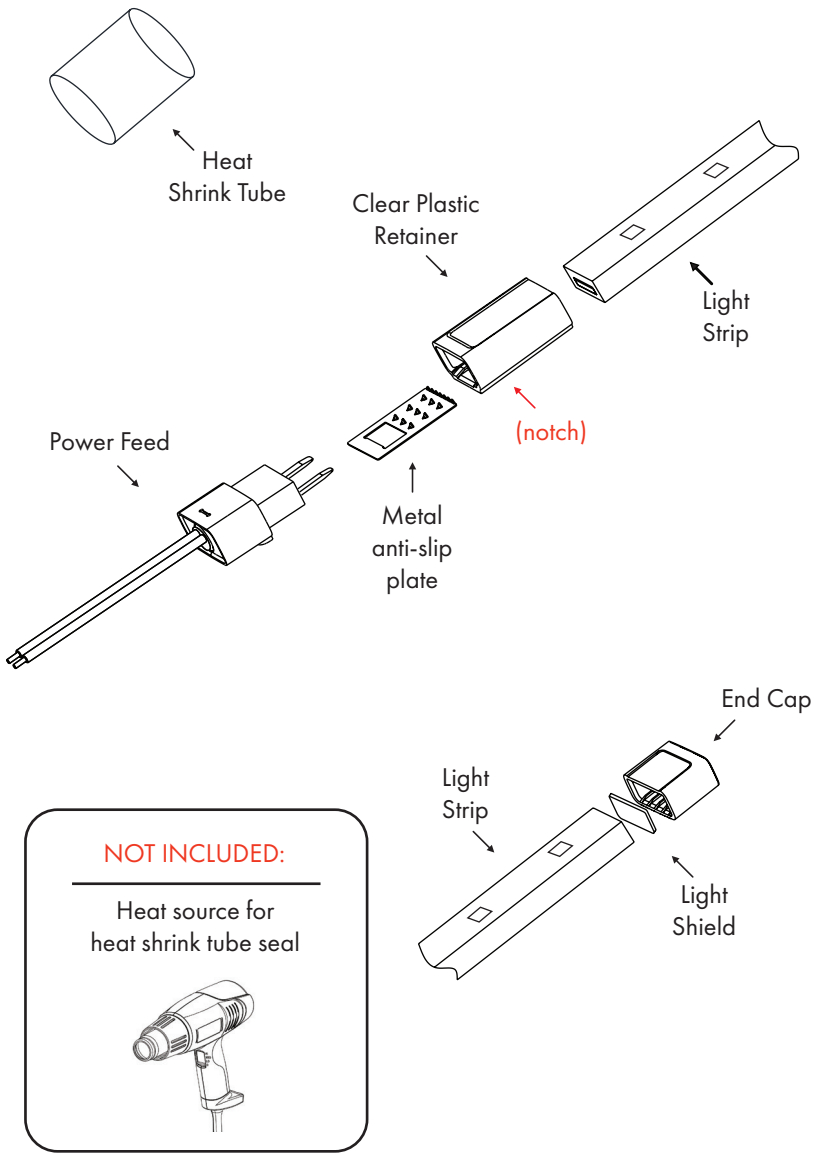

FIGURES

FIGURE C: Proper Handling

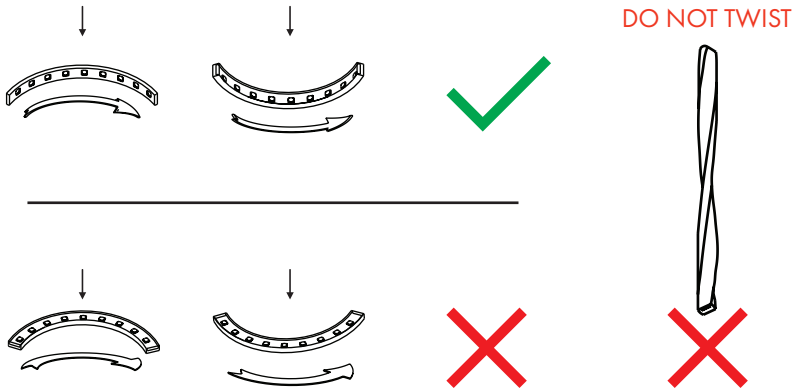
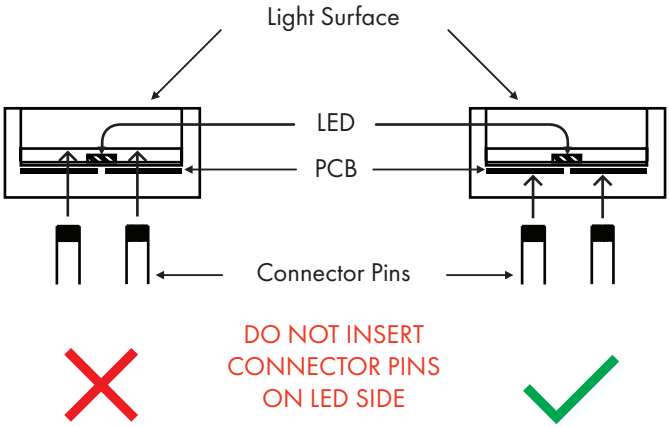
FIGURE D: Proper positioning of connector pins